George Jackson Limited

Unit 19, Kimpton Park Way,
Sutton, Surrey, SM3 9BW

Tel: 0208 687 9740
Email:info@georgejackson.com
www.georgejackson.com

Wolvesey / CN0611

Dimensions: 130 by 132mm

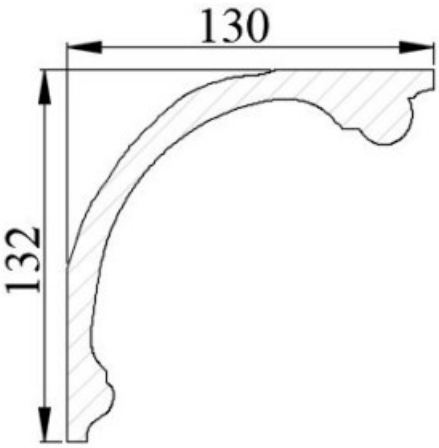

©2017 George Jackson Limited